BE 1-A240-DIF
Diffusor

- Diffusion filter
- For a homogenous light reduction and illumination
- Quick and easy fix and mounting
- Mounting materials included in scope of delivery

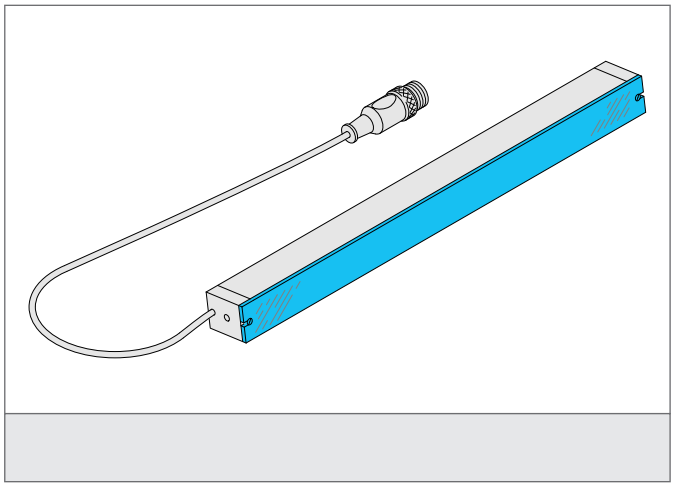

Safety instructions

The Instruments are not to be used for safety applications, in particular applications in which safety of persons depends on proper operation of the instruments.
These instruments shall exclusively be used by qualified personnel.

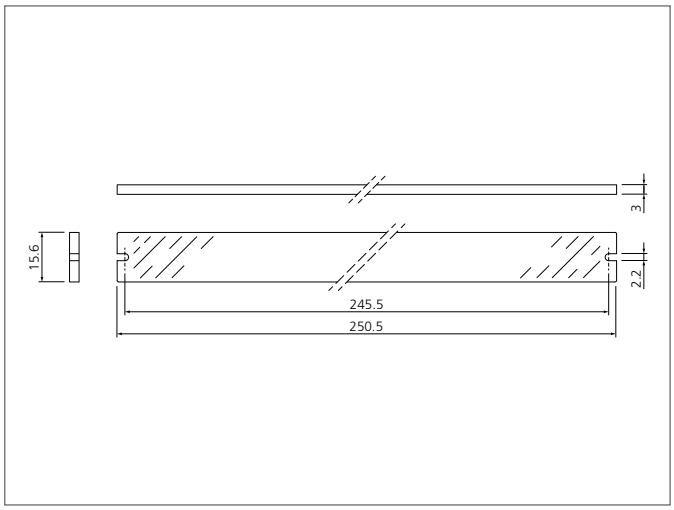

TECHNICAL INFORMATION (typ.)	+20°C, 24V DC
Mounting	2 holes
Size	250.5 x 15.6 x 3 mm (Dimensions)
Illuminated area	240 mm
For	Barlights BE 1-A240 ...
Material	PMMA (protective glass)
Scope of delivery	1 diffusion screen, 2 pan-head screws M2x6 DIN 7985 Zn, cross recess